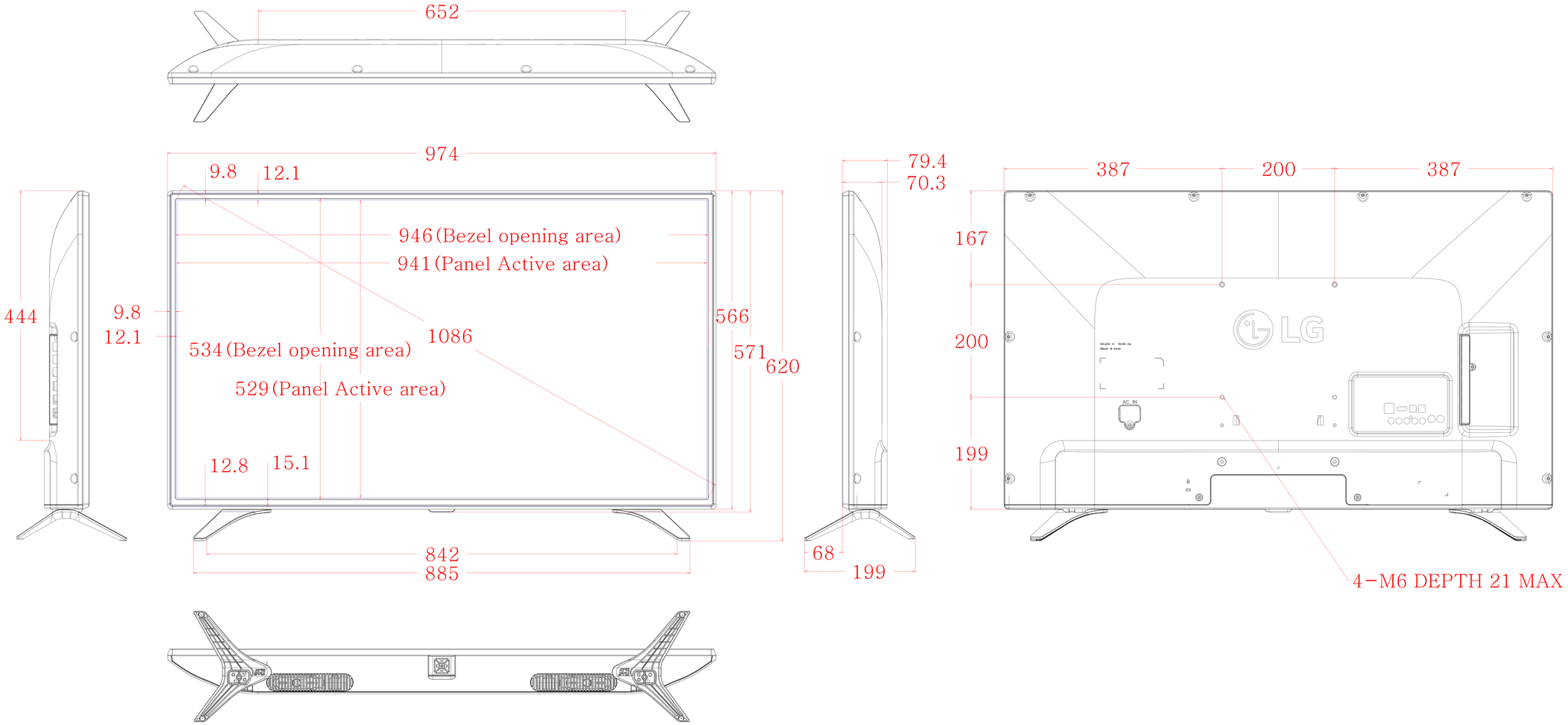
652
974
9.8
12.1
946 (Bezel opening area)
941 (Panel Active area)
444
9.8
12.1
1086
534 (Bezel opening area)
529 (Panel Active area)
566
571
620
12.8
15.1
842
885
79.4
70.3
68
199
387
200
387
167
200
199
LG
AC IN
4-M6 DEPTH 21 MAX